Network Standards and construction

Network – Classical "Tee" design in rural areas

Storage is shared between far away communities →
No ownership towards water savings (faucets remains open)

If pipe to Water Point (WP) 5 is broken →
The entire system fails

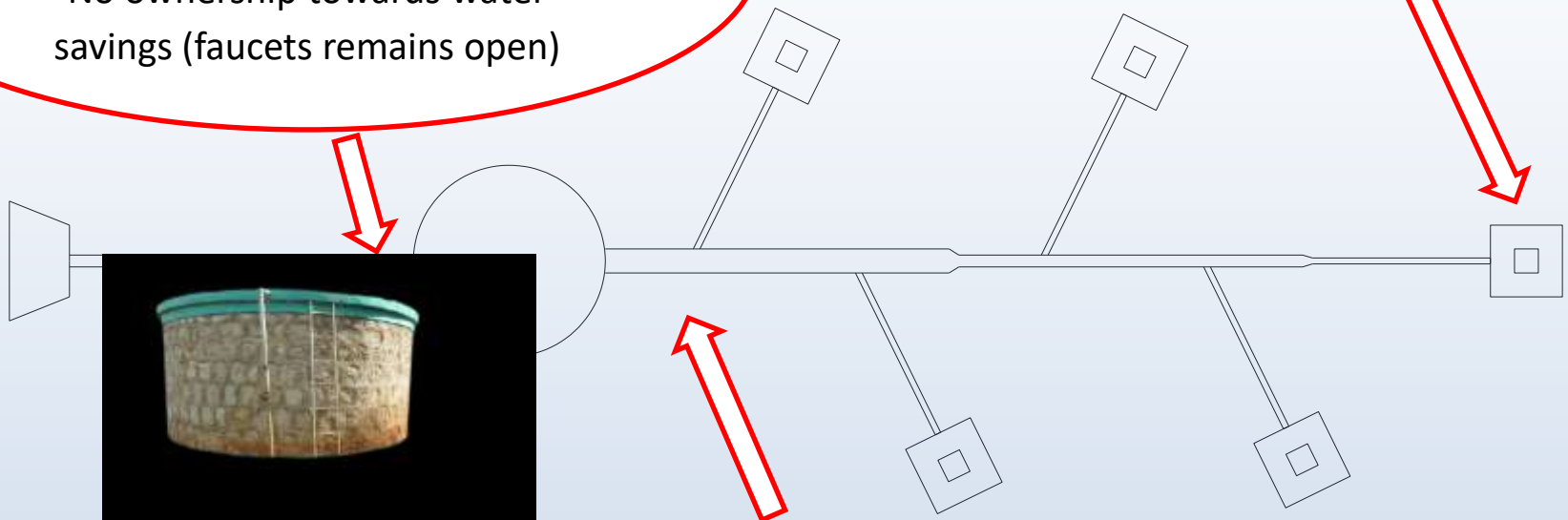

Large pipeline are needed
→ Expensive investment &
Difficult to maintain

Network – Classical "Tee" design in rural areas

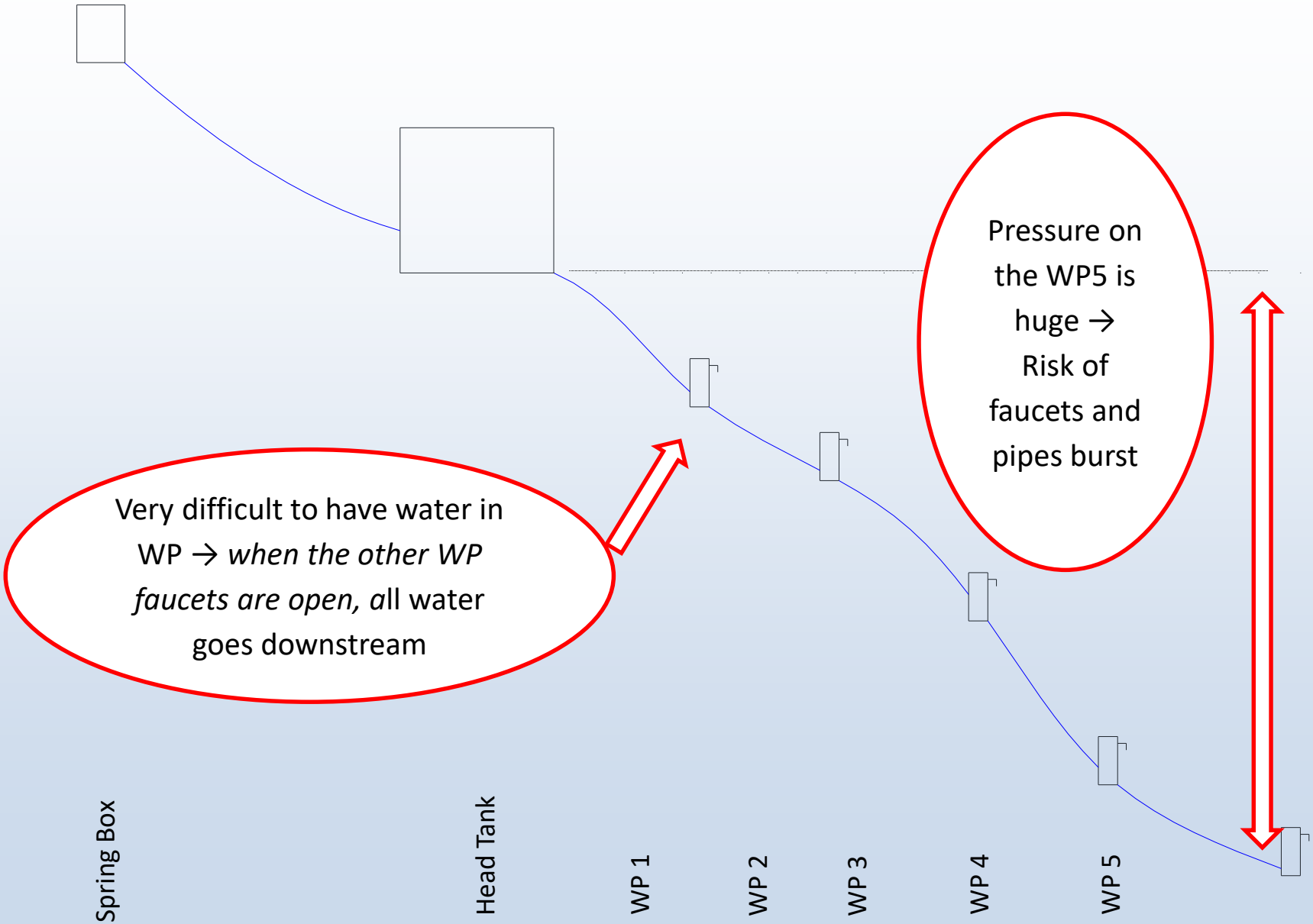

Network – Inter Aide "DB" Design

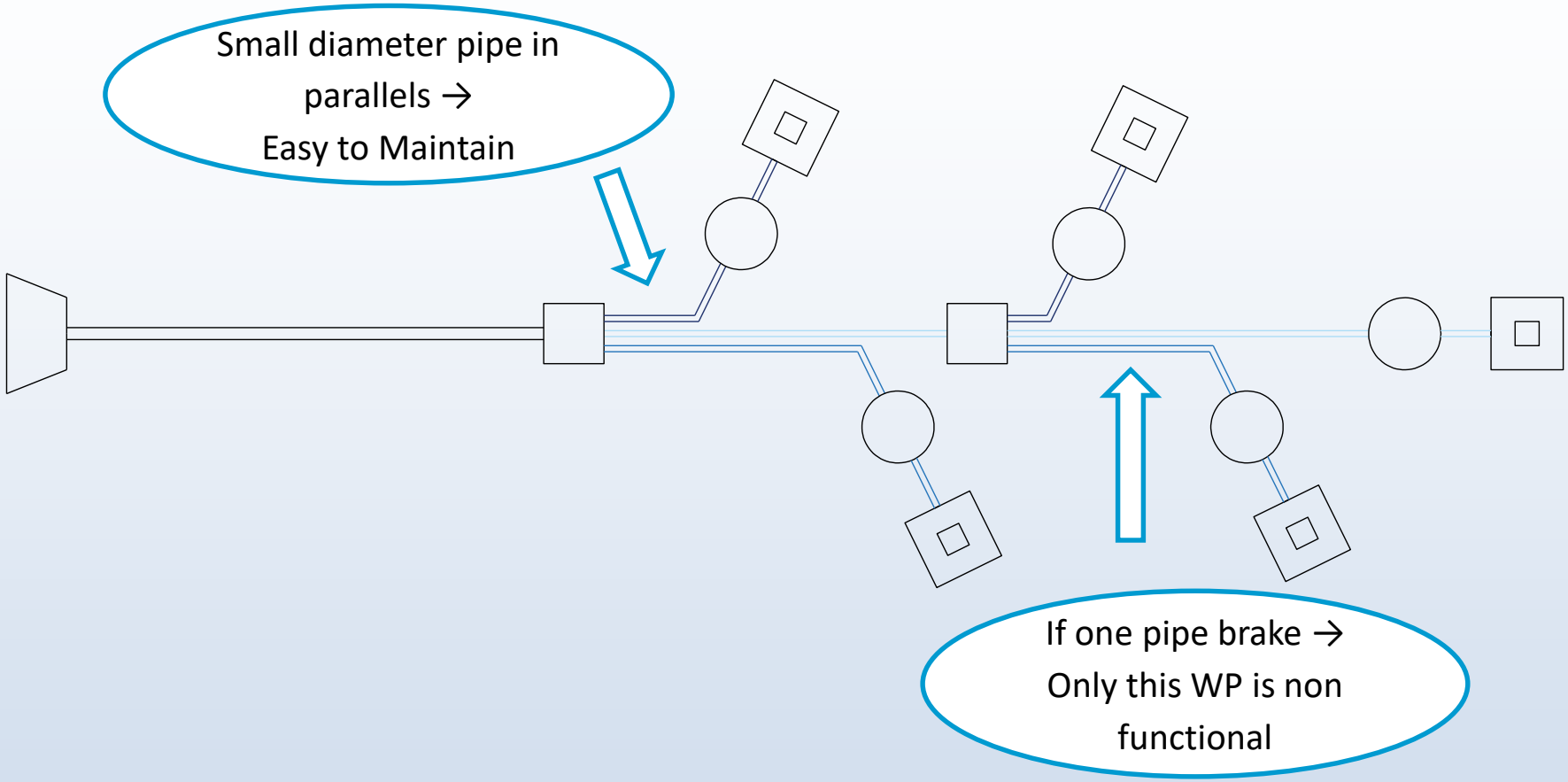

Spring Box

Distribution Box

Reservoir WP 1

Reservoir WP 2

Distribution Box

Reservoir WP 3

Reservoir WP 4

Reservoir WP 5

Network – Inter Aide Design

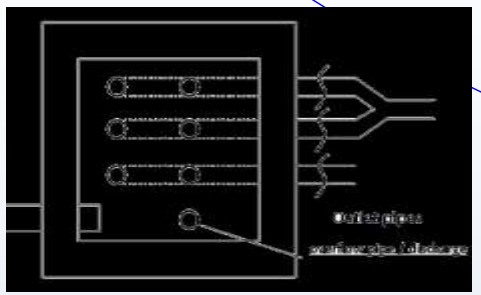

Each community manage its storage →
Real interest to maintain properly and close the faucets (water saving)

Distribution Box:
Perfect repartition of Water adjusted to each WP population need →
Limit conflict between communities

No pipe are under high pressure

Division Box

Separate the Flow:

- The flow falls into vertical pipes as if their where weirs
- The flow is proportional to the pipe diameter
- Thanks to the air vent, the flow is not dependent on the downstream pipeline

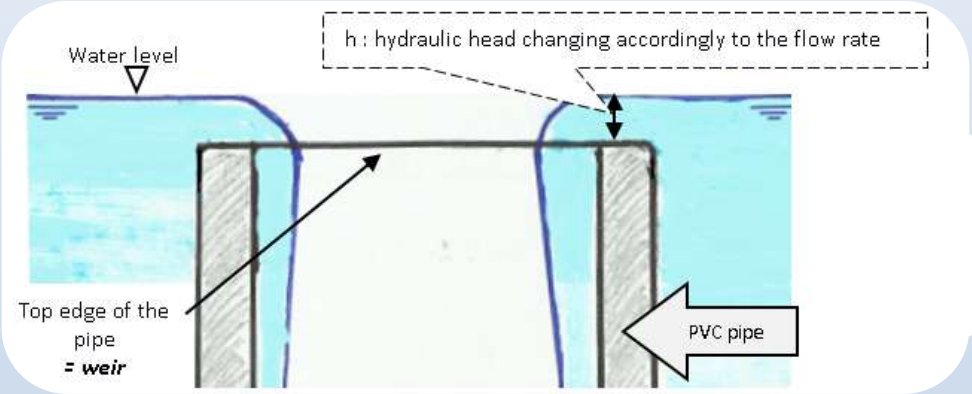

Division Box

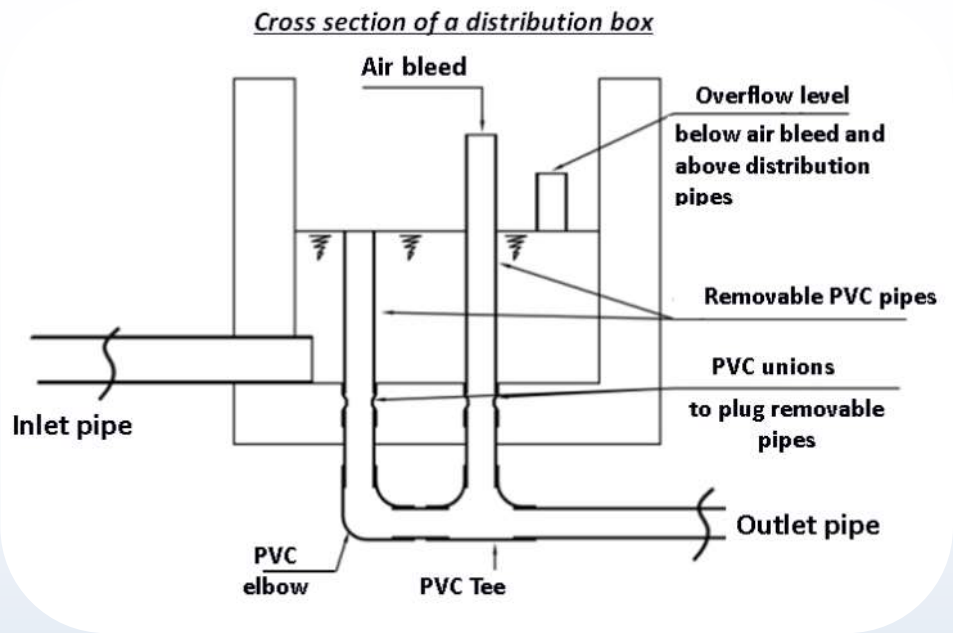

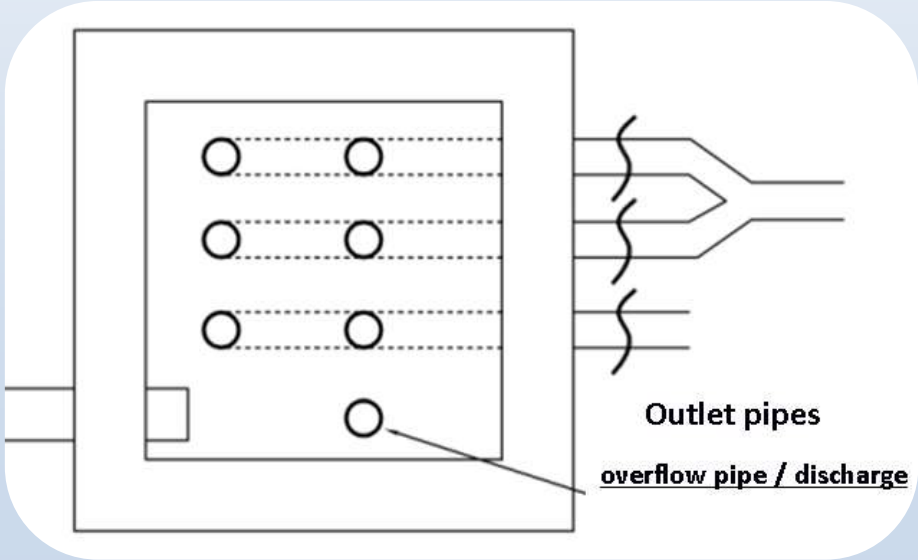

Division Box

Division box can be placed on top of reservoir to gain height and protection

Network – Inter Aide Design

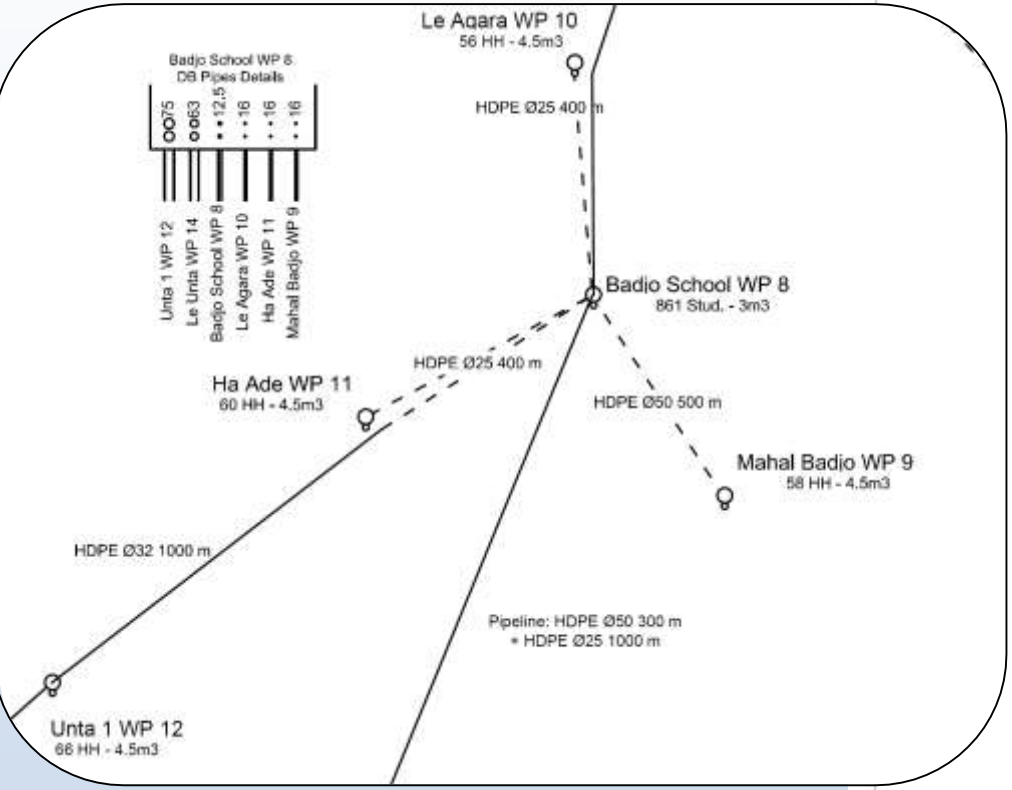

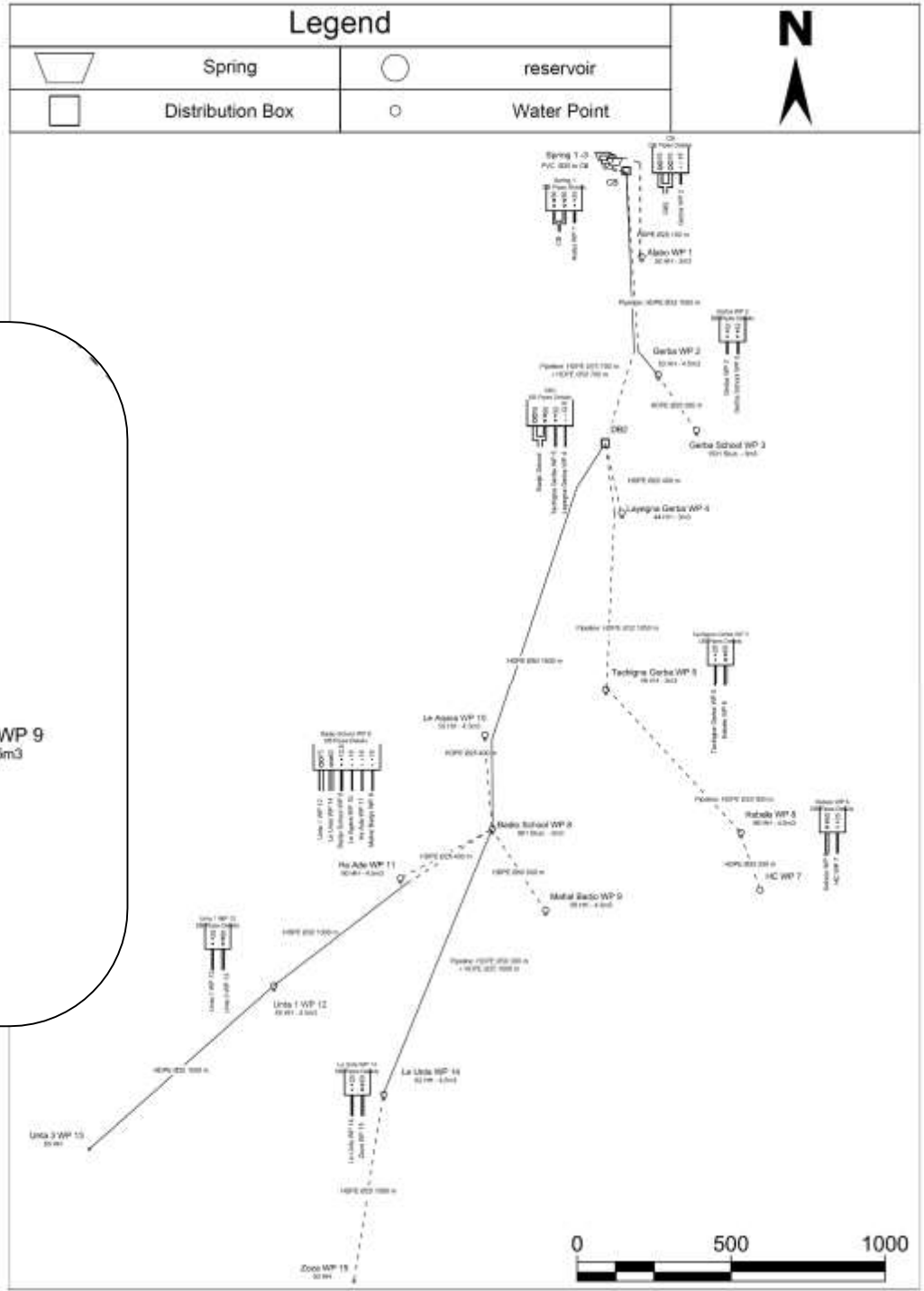

Ade Network :
15 WP serving 683 HH + 2 School + 1 HC

Pipeline : 700 m of 75 mm then all diameter < 50 mm All in PN10

Springs – Inter Aide Standards

Deep Excavation to insure:
- Water preferential path is toward spring Box
- Good spring water quality

Vegetative or Constructed upstream protection
(Fence not visible on this photo)

Springs – Inter Aide Standards

Deep Excavation to insure:
- Water preferential path is toward spring Box
- Good spring water quality

Vegetative or Constructed upstream protection
(Fence not visible on this photo)

Springs – Inter Aide Standards

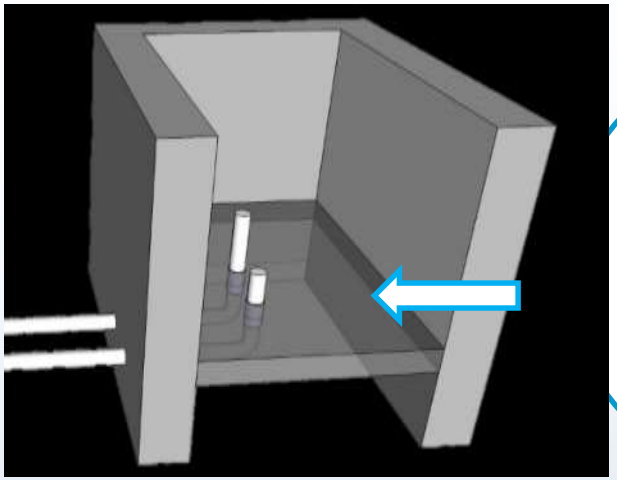

Removable overflow pipe serve as simple and robust washout for easy cleaning operations

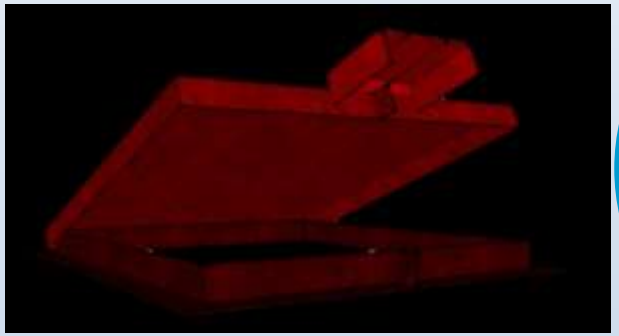

Strong Metallic door with padlock allows easy access for regular cleaning the of spring catchment box.

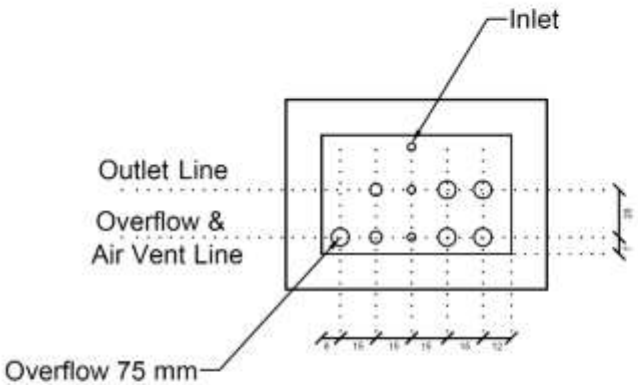

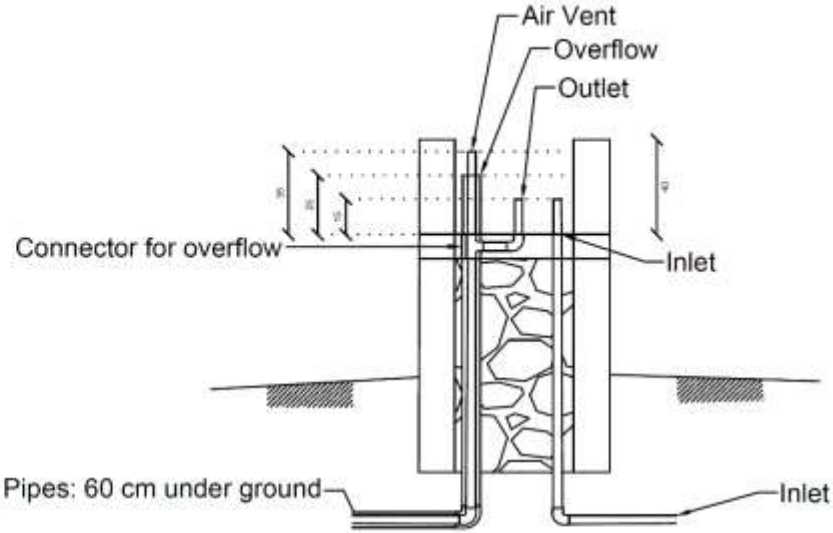

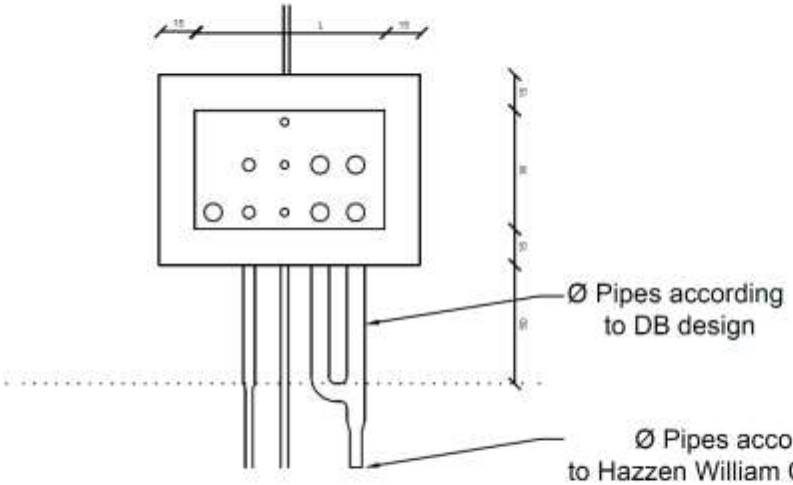

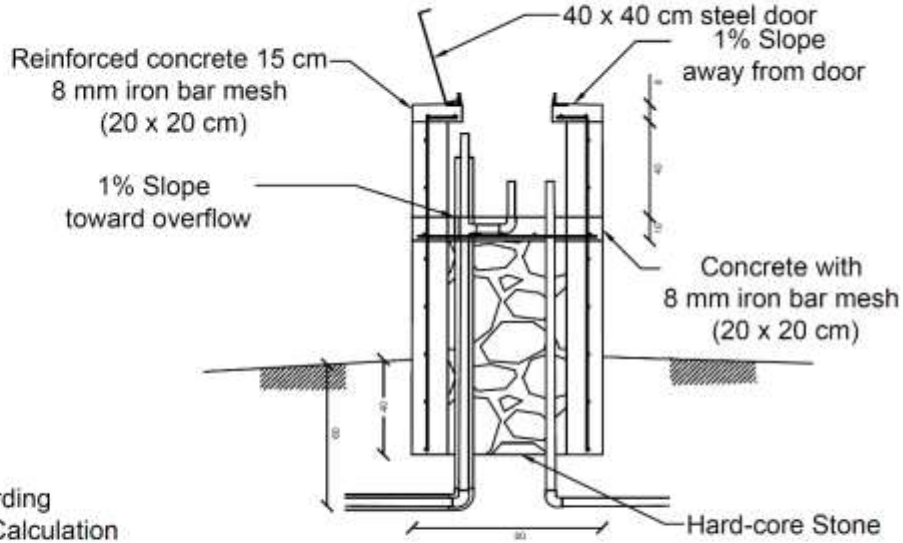

Orientation of pipes and evacuation may vary with site topography	**Length of DB Box adapted to the number of outlet pipes**	Unless otherwise specified :
	L(cm) = 20 + O x 15 With O: Number of oulet	
	W = 50cm for inlet Ø ≤ 50 mm and W = 75cm for inlet Ø > 75 mm	All concrete ratio 1 : 2 : 4

Reinforced concrete DB Box above ground	Update: 2019	Unit: cm	Inter Aide France

Reservoir

Concrete reservoir : 1 per WP

- Standard reservoir mold
- Community manage better its storage
- No problem of high static pressure

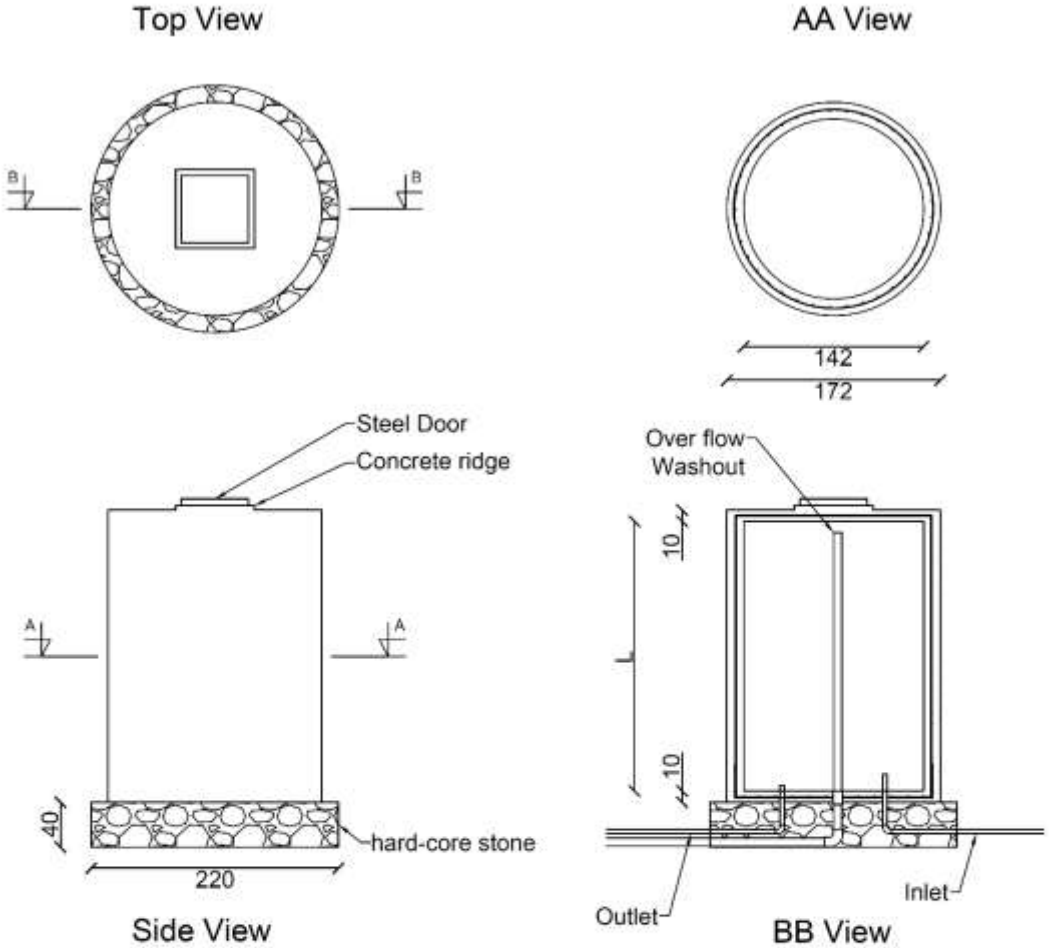

High of Reservoir adapted to the number of user and inlet flow	
H = 80 cm	V = 1.2 m³
H = 180 cm	V = 2.8 m³
H = 280 cm	V = 4.4 m³

Unless otherwise specified :

All concrete ratio 1 : 2 : 3

Reinforcement details

Elements		Rebar Ø	Rebar spacing
Bottom Slab		8 mm	15 cm
Wall	Horizontal ring top section (H to H - 80cm)	6 mm	20 cm
	Hor. ring Medium sec. (H - 80 to H - 180 cm)	6 mm	15 cm
	Hor. ring lower section (H -180 to H - 280 cm)	6 mm	10 cm
	Vertical rebar	6 mm	15 cm
Top Slab		6 mm	15 cm

Concrete Reservoir	Update: 2019	Unit: cm	Inter Aide France

WP – Inter Aide Design

WP - Washtable / Cattle trough

Wash Table for laundry

Access to clean water in cattle trough → Improved breeding performances

AA View

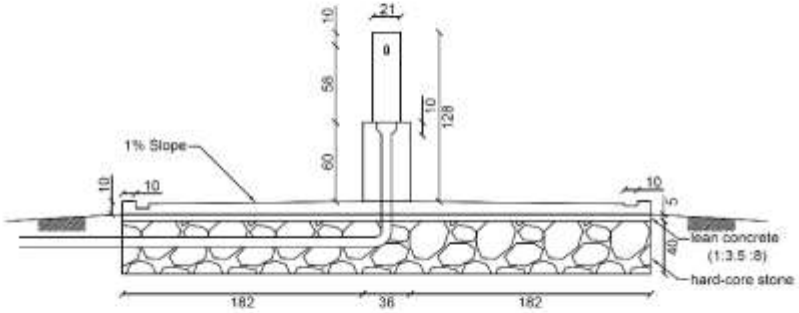

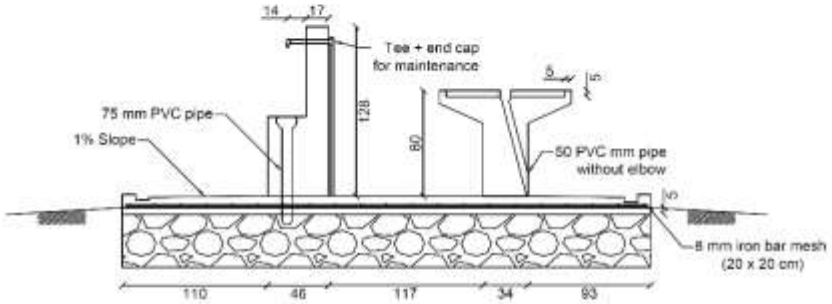

BB View

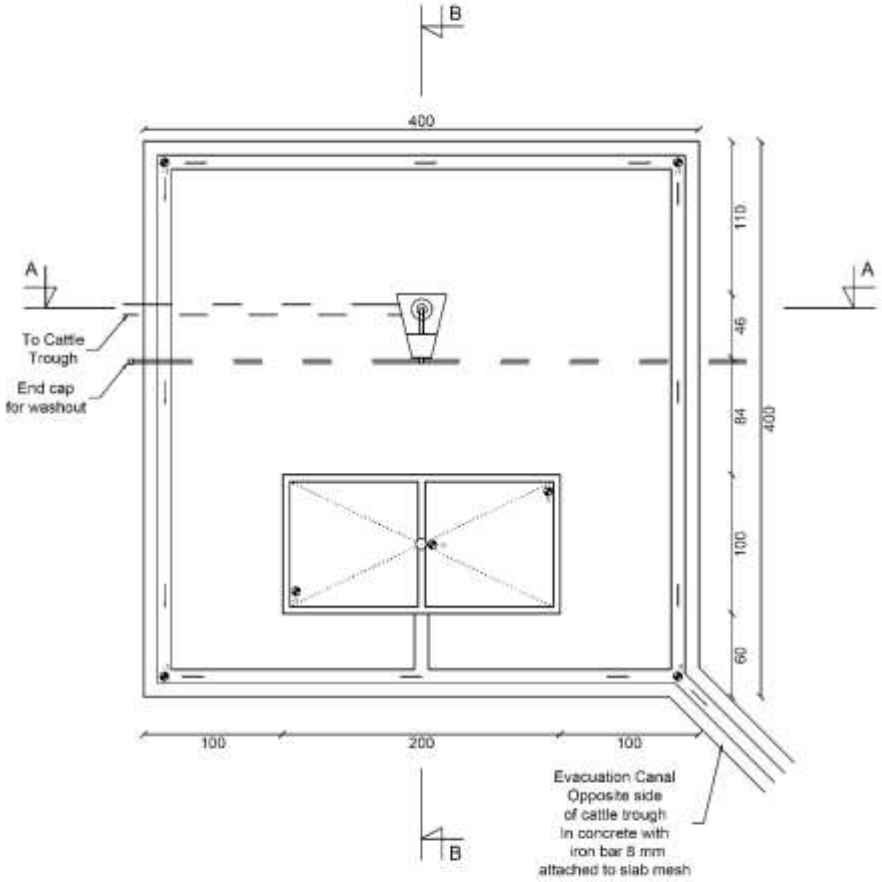

			Unless otherwise specified : All concrete ratio 1 : 2 : 4	
Standard water point	Elevation	Update: 2017	Unit: cm	Inter Aide France

Orientation of pipes and evacuation may vary with site topography			Unless otherwise specified : All concrete ratio 1 : 2 : 4	
Standard water point	Top View	Update: 2017	Unit: cm	Inter Aide France

Pipeline Design, open flow model

The “DB” system leads to a number of change as compare to the classical “Tee” system:

1. A single pipeline need to be considered which facilitate design
2. Almost all pipeline are open flow (not closed at their downstream end) which changes the way engineer should perceived pressure models

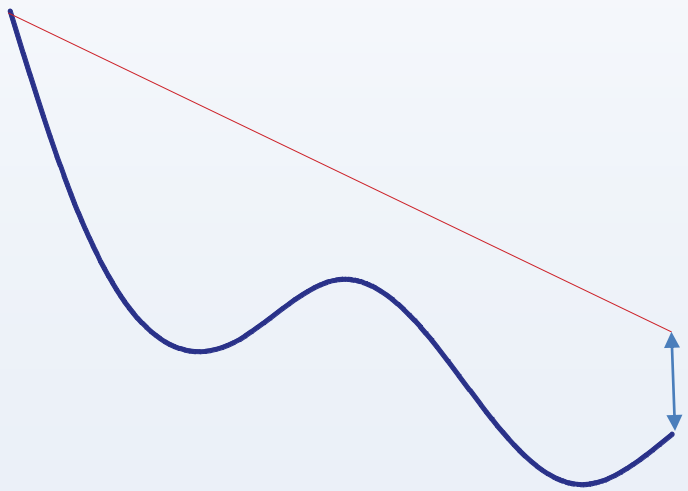

In open flow there is no pressure at end point

Pipeline Design, open flow model

The “DB” system leads to a number of change as compare to the classical “Tee” system:

1. A single pipeline need to be considered which facilitate design
2. Almost all pipeline are open flow (not closed at their downstream end) which changes the way engineer should perceived pressure models

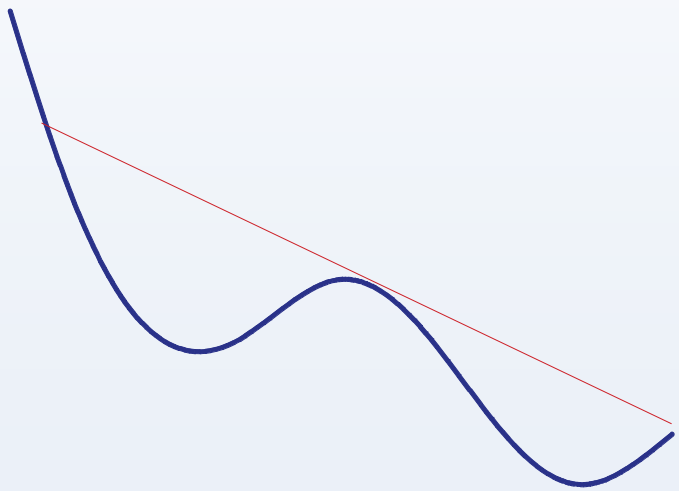

The pressure at end point = atmospheric pressure
Relative pressure is zero

Pipeline Design, open flow model

The model of visualization of this dynamic pressure has various impact:

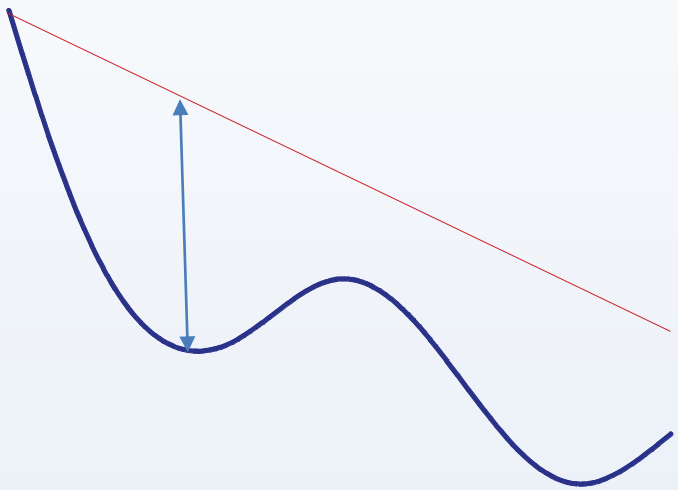

This graph shows very high dynamic pressure which do not happen in reality

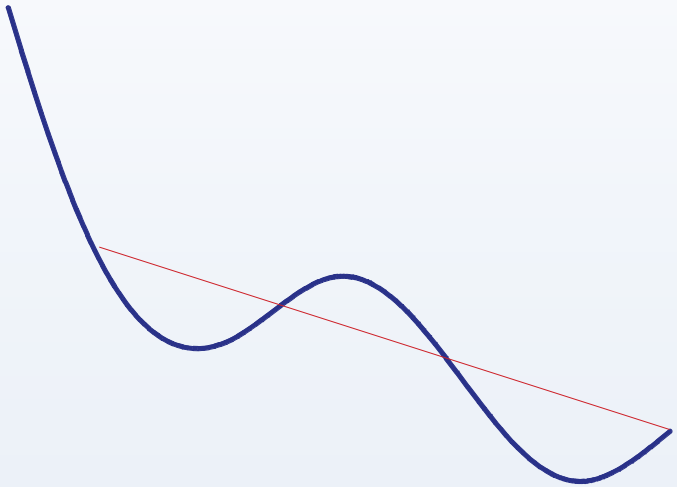

Open flow model shows negative pressure which would go unseen in traditional model

Pipeline Design: Technical Solution

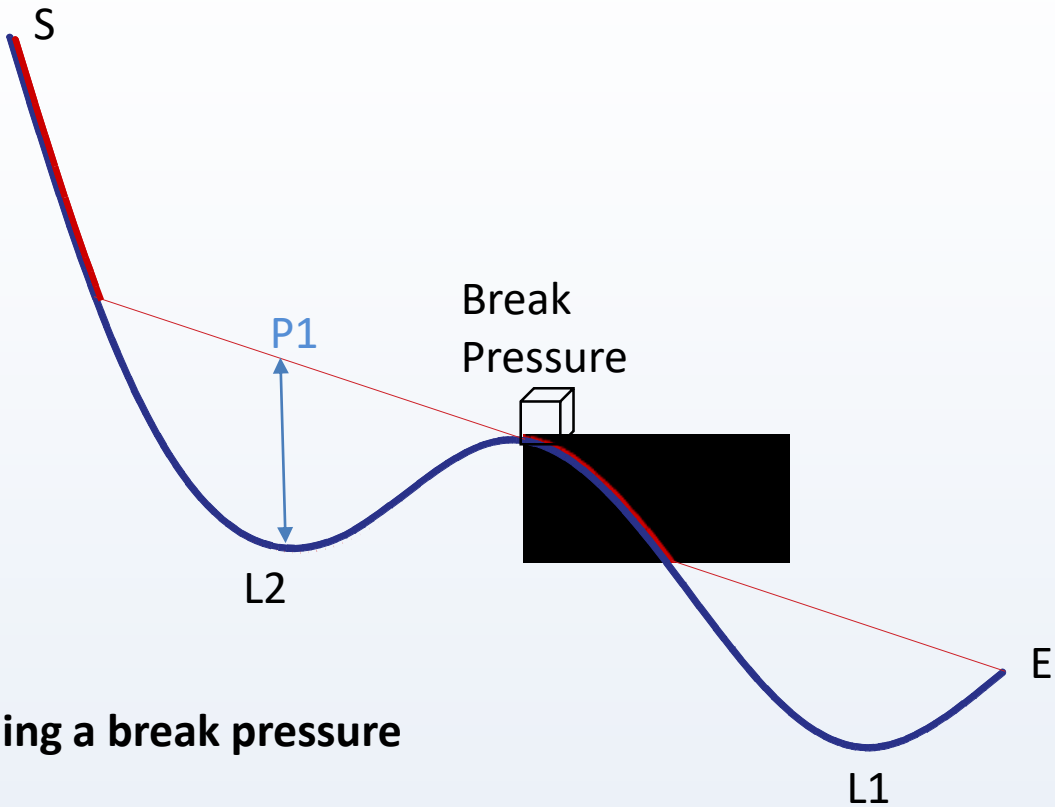

Solution 1: Adding a break pressure

Advantage:

- No more negative pressure

Disadvantage

- A bit costly
- Pipe diameter stay quite large

Pipeline Design: Technical Solution

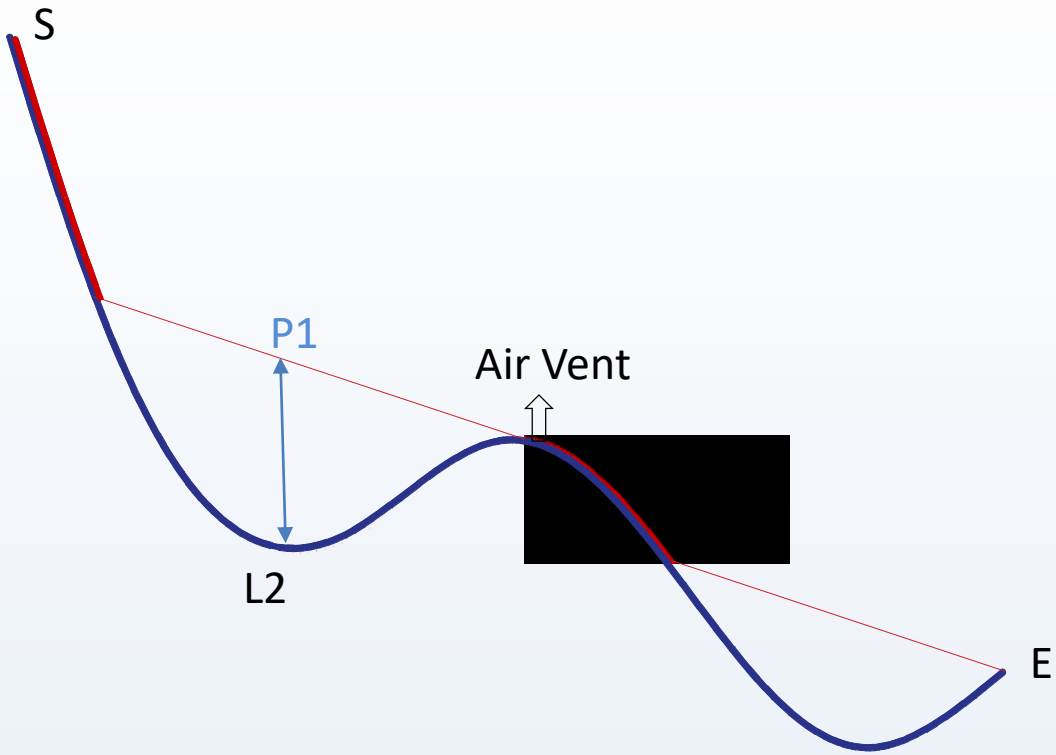

Solution 2: Adding air vent (auto air vent or breather pipe)

Advantage:

- No more negative pressure
- Less costly than break pressure

Disadvantage

- Pipe diameter stay quite large

Pipeline Design: Technical Solution

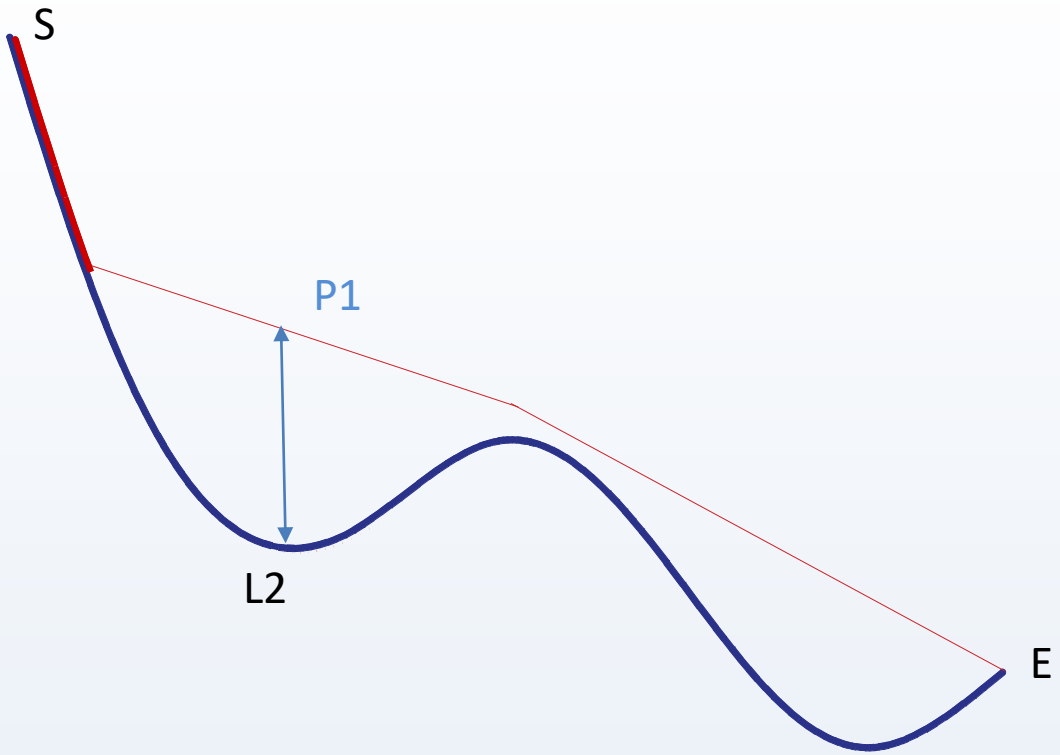

Solution 3: Reducing downstream pipe size

Advantage:

- Reduce cost as pipe diameter in reduced
- No more negative pressure

Disadvantage

- Availability of different pipe size

Pipeline Block

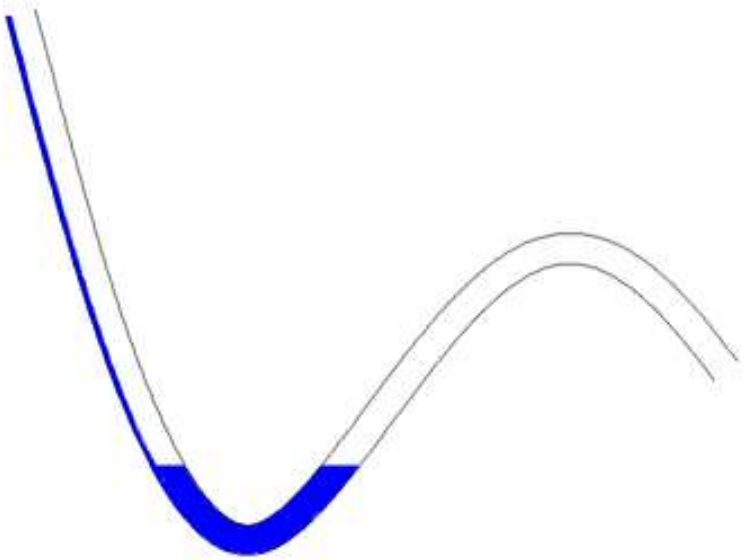

DB A1	Awaye DB	Given By DB	Min Needed	Max Flow	Inc. Name	Com. Name	
							Close
							Show WP

Inlet From DBW1 2.83 l/s

Kunhe DB

SB

				2.83 l/s	1.21 l/s	7.26 l/s				
Pipe To WP			Ø 13	0.06 l/s	0.06 l/s	0.17 l/s	WP A1	Awaye school	WP1	
			Ø 16	0.08 l/s	0.08 l/s	0.21 l/s	WP A2	SB	WP2	
			Ø 16	0.08 l/s	0.08 l/s	0.21 l/s	WP A3	Ajacho Awaye M	WP3	
			Ø 16	0.08 l/s	0.08 l/s	0.21 l/s	WP W11	SB	WP4	
			Ø 16	0.08 l/s	0.09 l/s	0.21 l/s	WP M7	Biruh tesfa	WP5	
			Ø 16	0.08 l/s	0.08 l/s	0.21 l/s	WP W12	2nd Le wekecho	WP6	
									WP7	
									WP8	
Pipe to DB	Ø 90	Ø 63	Ø 75	1.17 l/s	0.74 l/s	3.01 l/s	DB M1	Masane Adjacho DB		
	Ø 90	Ø 63	Ø 76	1.18 l/s	0.00 l/s	3.03 l/s	DB B1	0		

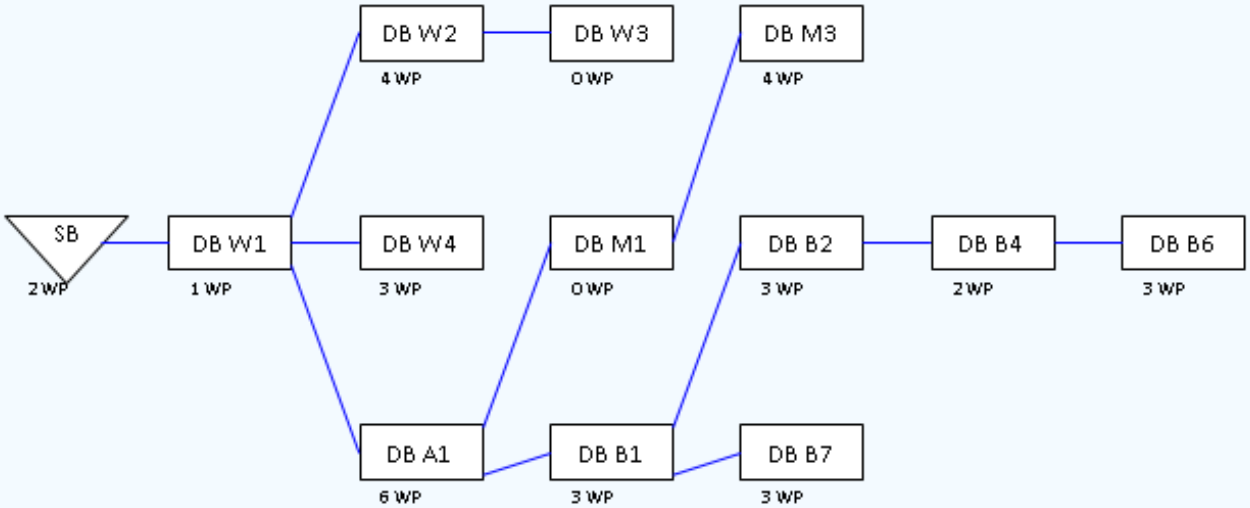

Pipeline Design: Tool developmentr

To DB Zeb	DB Zebo
Design Flow (l/s)	2.40
Max from DB	10.00
Max. Allowable flow (l/s)	2.78
Flow is limited by first section afterBreather Pipe	

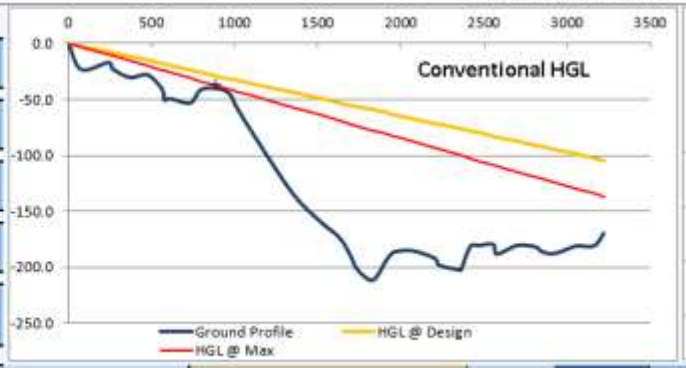

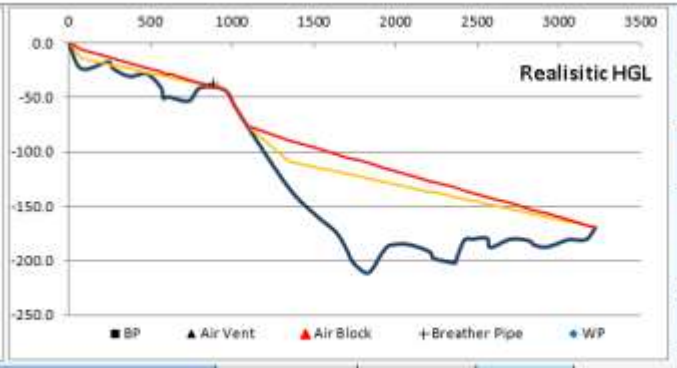

< GoTo DBs >

Show Static

Show Double

Show Air Blocks

GPS Topograpy

Field survey datas				Topografic profile calculation			Pipe characteristics			Yield (l/s)	PN	Results		Remark & GPS	Structures	Cost (ETB)		Real Residual Head Bottom-Up	
No	Lat (D.dddddd)	Lon (D.dddddd)	Alt (m)	Dist. (m)	Cumul. Distance (m)	Cumul. Altitude (m)	Pipe Type	Pipe Size	Pipe PN		Max Acc. Press. (m)	Residual head Conventional Top - Down	Speed in pipe (m/s)			361,182		@ design flow	@ max flow
98	6.78899	37.35374	1633.3	0.0	0	0.0				2.40				Spring	DBxx	[illegible]	[illegible]	0.0	0.0
99	6.78904	37.35304	1609.5	78.4	78.4	-23.8	PE Pipe	63_mm	PN_16	2.40	140	21.2	1.2	Crossing		9005		9.6	17.7
100	6.78878	37.35158	1615.8	183.9	242.3	-17.5	PE Pipe	63_mm	PN_16	2.40	140	9.6	1.2			18830	High Point	2.0	4.5
101	6.78876	37.35133	1609.8	27.7	270.0	-23.5	PE Pipe	63_mm	PN_16	2.40	140	14.7	1.2			3188		3.1	9.3
104	6.78845	37.35044	1602.4	102.3	372.3	-30.8	PE Pipe	63_mm	PN_16	2.40	140	18.7	1.2	Lower crossing		11751		7.1	12.3
105	6.78744	37.34991	1604.7	106.6	478.9	-28.5	PE Pipe	63_mm	PN_16	2.40	140	13.0	1.2			12249	High Point	1.3	5.5
106	6.7867	37.35043	1591.8	87.0	565.9	-41.4	PE Pipe	63_mm	PN_16	2.40	140	23.1	1.2	Crossing		9994		11.4	14.7
107	6.78657	37.35045	1582.4	12.0	577.8	-50.9	PE Pipe	63_mm	PN_16	2.40	140	32.2	1.2	Crossing		1375		20.5	23.6
108	6.78638	37.35029	1583.6	24.1	601.9	-49.7	PE Pipe	63_mm	PN_16	2.40	140	30.2	1.2			2769	High Point	18.5	21.4
109	6.78618	37.35013	1583.1	25.3	627.2	-50.1	PE Pipe	63_mm	PN_16	2.40	140	29.8	1.2	Crossing		2902		18.2	20.8
110	6.78568	37.34923	1579.8	108.8	736.0	-53.5	PE Pipe	63_mm	PN_16	2.40	140	29.8	1.2	Crossing		12499		18.0	19.5
111	6.78549	37.34871	1581.4	60.7	796.7	-41.8	PE Pipe	63_mm	PN_16	2.40	140	18.0	1.2	Hole in pipe		6975		4.3	5.3
112	6.78573	37.34791	1592.8	91.2	887.9	-40.4	PE Pipe	63_mm	PN_16	2.40	140	11.6	1.2		Breather Pipe	10482	High Point	0.0	0.0
113	6.78556	37.34732	1589.9	67.6	955.5	-43.3	PE Pipe	63_mm	PN_16	2.40	140	12.3	1.2			7767		0.0	0.0
114	6.78554	37.34701	1583.9	34.5	990.0	-49.4	PE Pipe	63_mm	PN_16	2.40	140	17.3	1.2	Uncovered		3963		0.0	0.0

Pipeline Design: Tool development

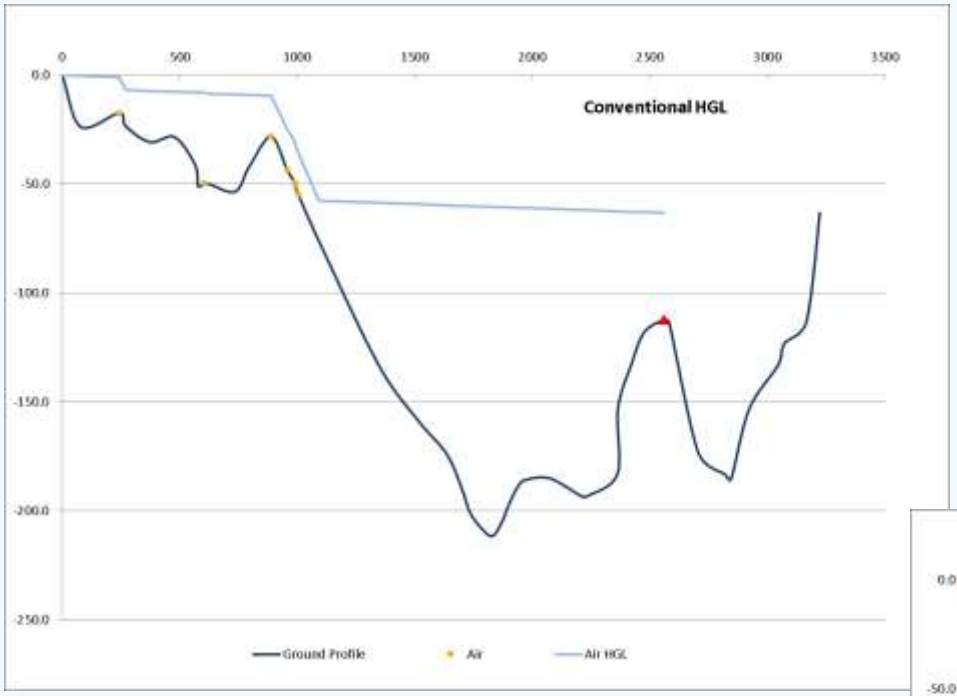

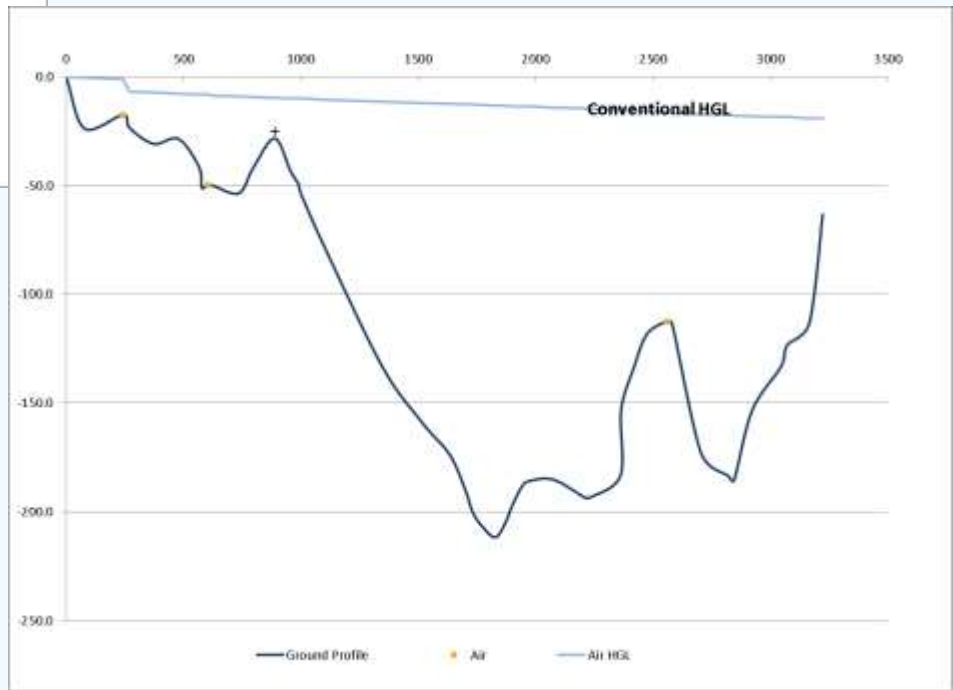

Placement of air release mechanisms
At the appropriate location and only when needed

Command Maps

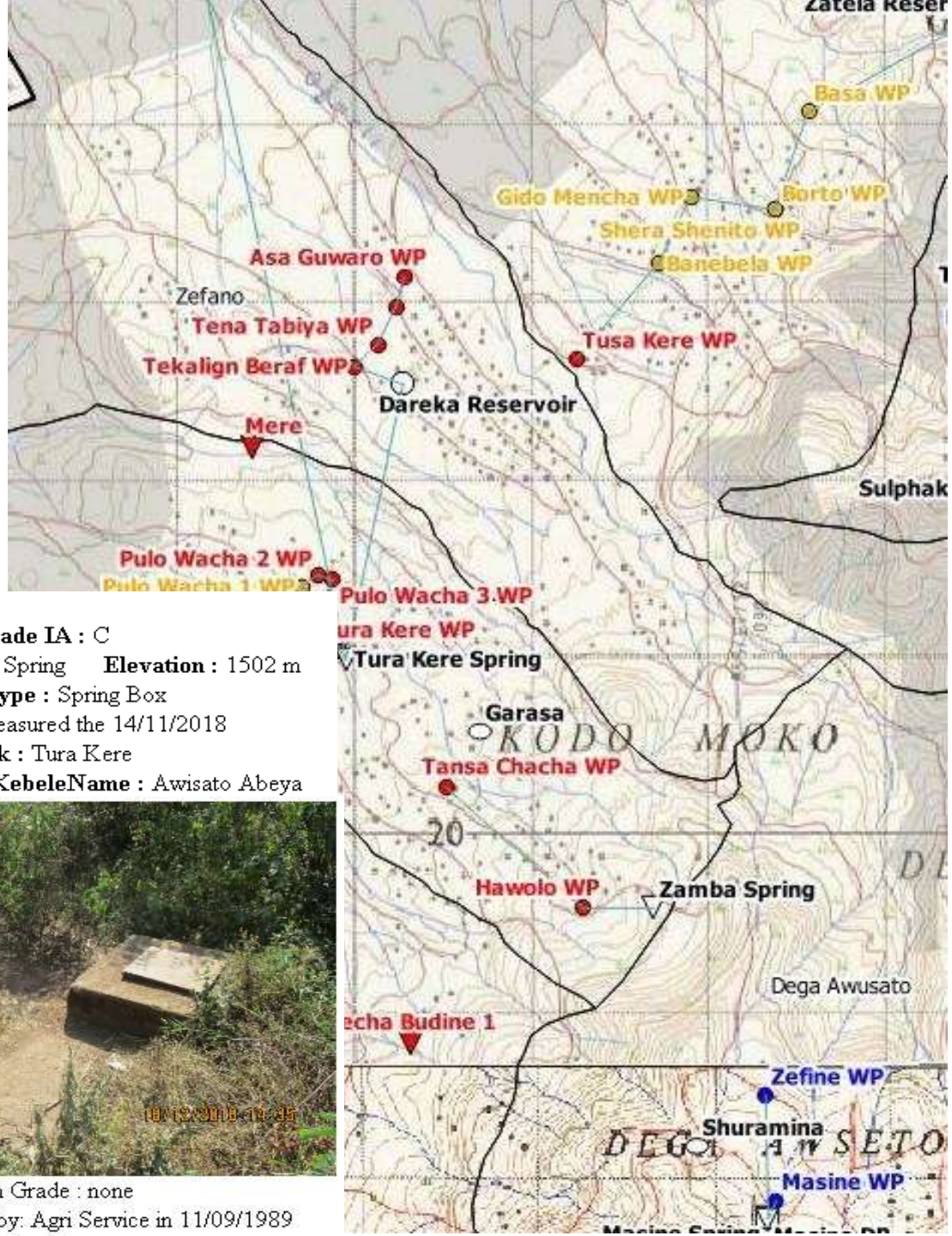

Grade IA : C
Com. Name : Tura Kere Spring **Elevation :** 1502 m
Structure Type : Spring Box
Yield : 2.17 l/s measured the 14/11/2018
Network : Tura Kere
WoredaName : Boreda **KebeleName :** Awisato Abeya

Federation Grade : none
Constructed / Rehabiliated by: Agri Service in 11/09/1989

Legend

Structures

- WP A
- WP B
- WP C
- WP D
- WP E
- WP Y
- On Spot A
- On Spot B
- On Spot C
- On Spot D
- On Spot E
- Spring Box
- Reservoir
- DB
- Uncapped Spring

- Pipes
- Kebele

Tambaro Woreda Water Resource Optimization

Workshop outcome 16/11/2020 GC

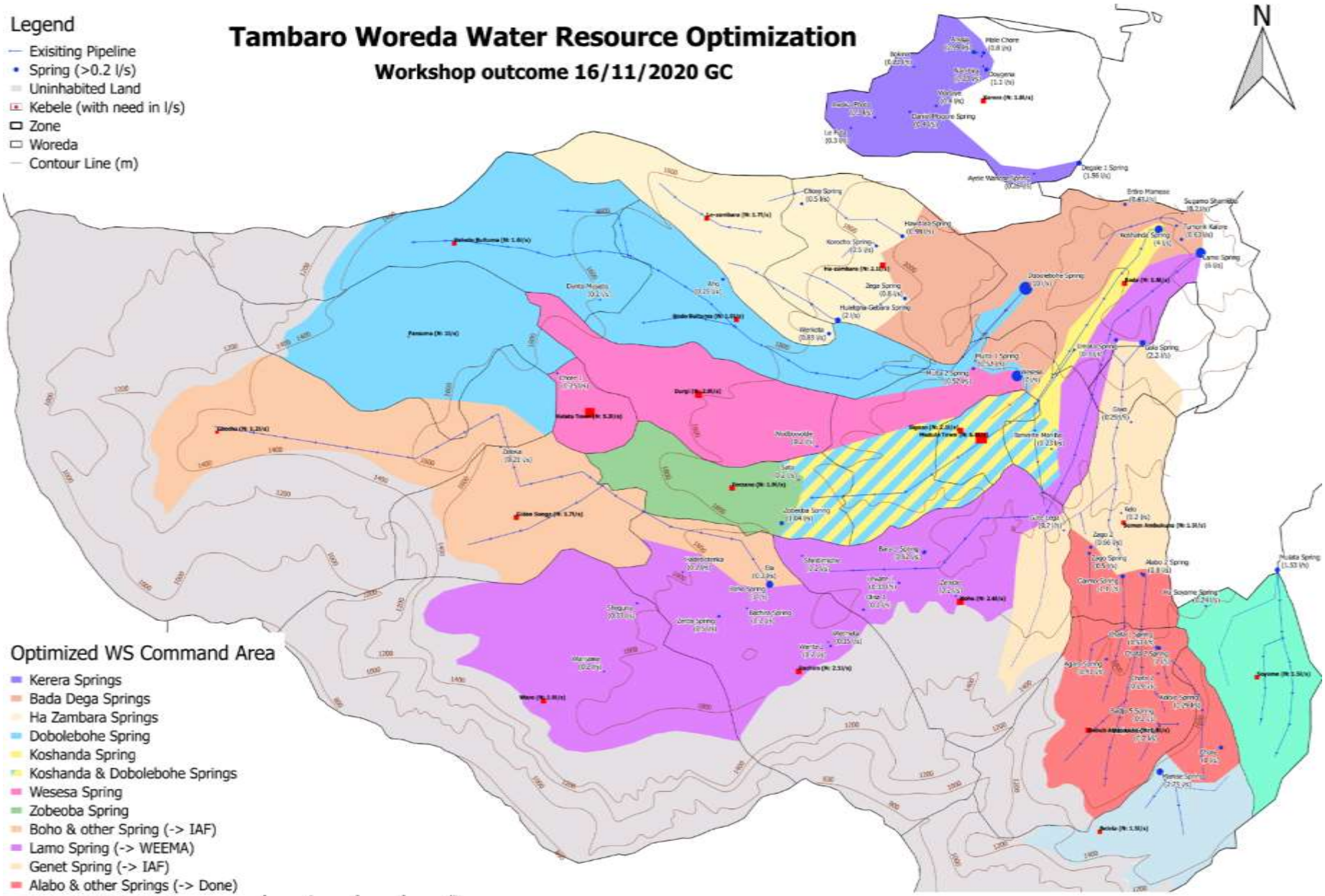

Need: Calculated from kebele population taking into account a service of 15 l/day/capita for rural area and 25 l/day/capita in town (Mudula, Durgi, Kelata)

Kucha Alfa Management of the water Ressources (2013 EC)

Legend

Mount Kaske

Uninhabitated

Covered Area

Contour Line

Water network

Kucha Alfa Spring (l/s)

Capped Spring (blue)

Uncapped Spring (Yield>0.2)

Small uncapped spring (Yield>0.1

Fonctional

Non fonctional

CoWash

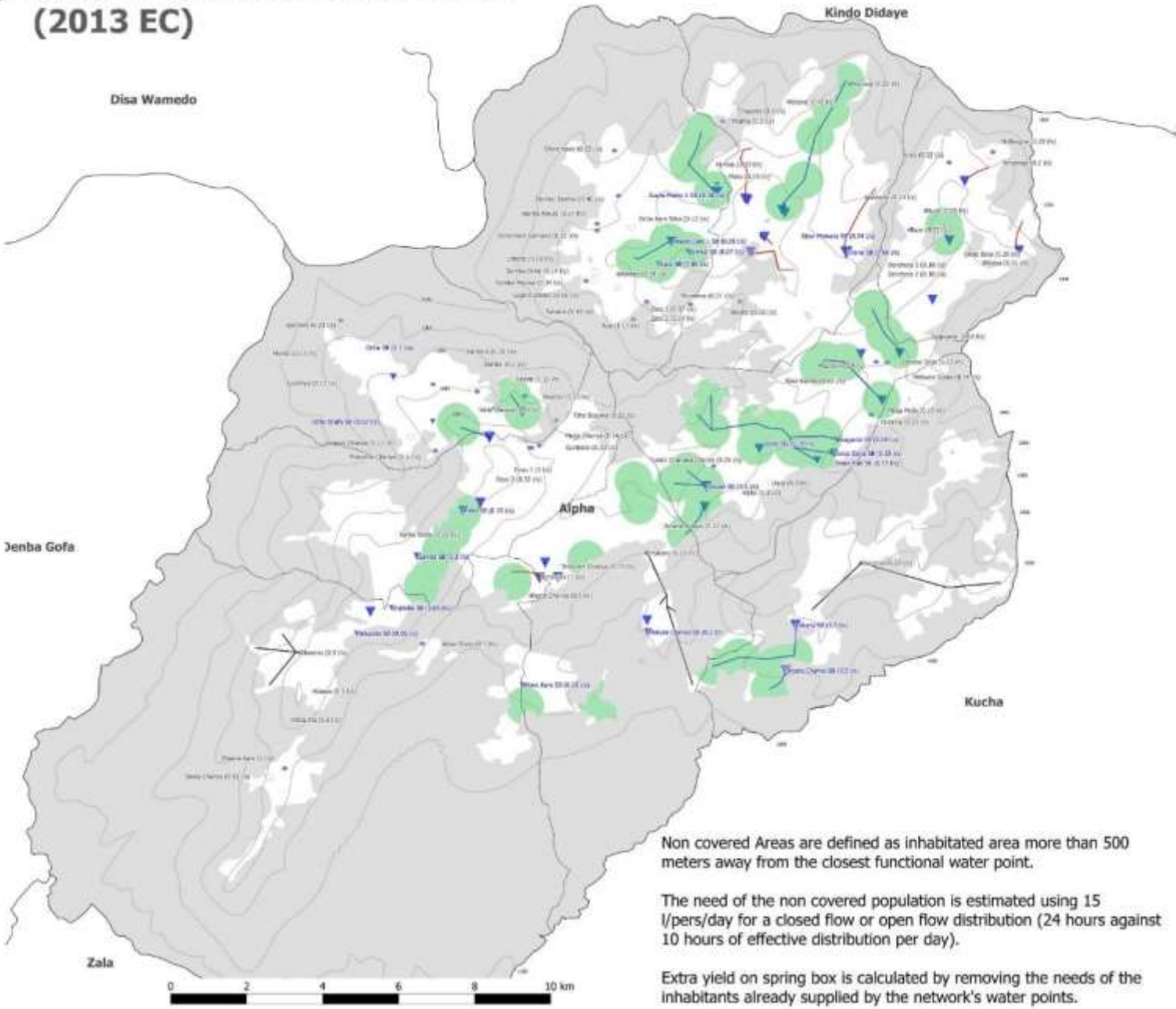

Capped spring with a yield smaller than 0.2l/s are not labelled

Uncapped spring with a yield smaller than 0.2l/s are not labelled

Uncapped spring with a yield smaller than 0.1l/s are not symbolized

Non covered Areas are defined as inhabitated area more than 500 meters away from the closest functional water point.

The need of the non covered population is estimated using 15 l/pers/day for a closed flow or open flow distribution (24 hours against 10 hours of effective distribution per day).

Extra yield on spring box is calculated by removing the needs of the inhabitants already supplied by the network's water points.

Co – Wash Planed Networks